SOLENOID VALVE
3/2- NC - NO - US (Universal service)
Direct acting
G 1/8

L372

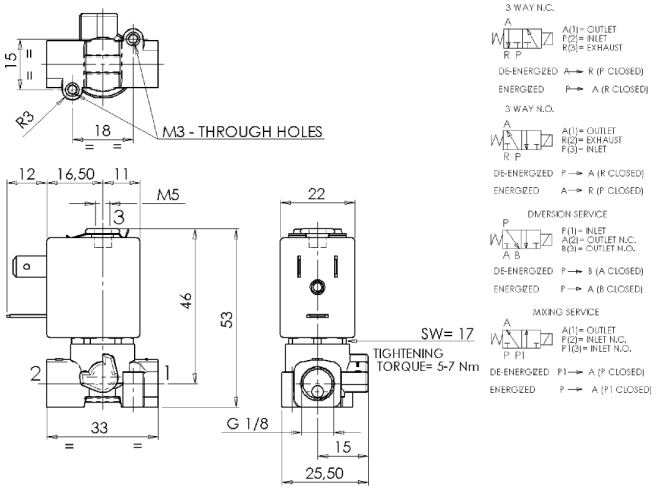

► GENERAL FEATURES

Direct acting solenoid valve.

Available also integrated on manifold (2÷10 actuators), see the technical data sheet L872.

Suitable to shut off liquid and gaseous fluids (verify the compatibility of fluid with material in contact)

► TECHNICAL FEATURES

Maximum allowable pressure (PS)	50bar
Opening time	~10ms
Closing time	~10ms
Fluid temperature	0°C +130°C
Max viscosity	5°E (~37 cStokes or mm²/s)

► COIL

		ZB10A	ZB12A	ZB14A
Approval		/	UL and CSA	UL and CSA
Encapsulation material		PA fiberglass reinforced	PET fiberglass reinforced	PET fiberglass reinforced
Insulation class		F (155°C)	F (155°C)	H (180°C)
Ambient temperature		-10°C +60°C	-10°C +60°C	-10°C +75°C
Continuous duty		ED 100%		
Electric connection		DIN 46340 - 3 poles plug connector		
Protection degree		IP 65 (EN 60529) with plug connector	IP 67 (EN 60529) with plug connector	IP 67 (EN 60529) with plug connector
Voltages	*DC*	12-24V (+10% -5%)		
	AC	24V/50-60Hz - 115V/50Hz - 230V/50-60Hz (+10% -15%) (Other voltages and frequencies on request).		

► MATERIALS IN CONTACT WITH FLUID

Body	Brass	*Seat*	Brass
Sealing	FPM	*Core tube*	Stainless steel
Internal components	Stainless steel	*Shading coil*	Copper

Port size ISO 228	Orifice size (mm)		Differential pressure (bar) Δp min	Δp max Gases c.a.	Δp max Gases c.c.	Δp max Liquids c.a.	Δp max Liquids c.c.	Kv (m³/h) 1↔2	Kv (m³/h) 1↔3	Series and type Valve	Series and type Coil	Power absorption AC (VA) Inrush VA	Power absorption AC (VA) Holding VA	Power absorption AC (VA) Holding W	Power absorption DC W	Sealings	Notes	Weight (kg)
	1↔2	1↔3																
NC – Normally closed																		
G1/8	1,2	1,2	0	15	15	15	15	0,05	0,05	L372V03C	ZB10A ZB12A	12	6	4	5,5	FPM	1	0,155
	1,6	1,2		10	10	10	10	0,08	0,05									
	2	1,2		5	5	5	5	0,1	0,05									
	2,4	1,2		4	4	4	4	0,13	0,05									
NO – Normally open																		
G 1/8	1,6	1,2	0	8,5	8,5	8,5	8,5	0,08	0,05	L372V03A	ZB10A ZB12A	12	6	4	5,5	FPM	1	0,155
US –Universal service																		
G 1/8	1,2	1,2	0	7	7	7	7	0,05	0,05	L372V03G	ZB10A ZB12A	12	6	4	5,5	FPM	1	0,155
	1,6	1,2		4,5	4,5	4,5	4,5	0,08	0,05									
	2	1,2		3	3	3	3	0,1	0,05									
	2,4	1,2		2	2	2	2	0,13	0,05									

► NOTES

- Sealings: FPM = Fluoro-carbon elastomer
- On request: - version with manual override: L372V01
  - sealings in EPDM (Ethylene-propylene elastomer): L372D03
  - body valve in stainless steel AISI 316: L372V07
  - body valve with special surface treatments
  - coil in class H (ZB14A – see § "COIL")
  - grease/oil free versions

1 – ZB12 and ZB14 coils fitted with sealing gaskets underneath and on the upper part (see sectional view on the back)

0903/1105

▶ SPARE PARTS

WITH ZB10A COIL

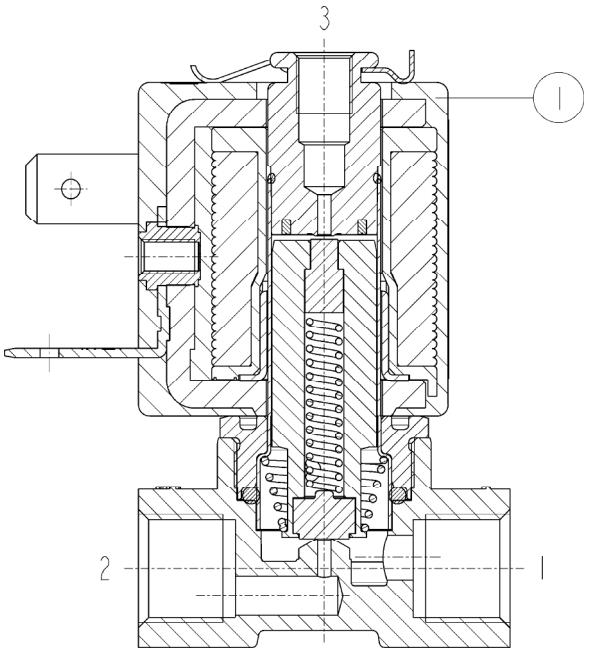

WITH ZB12A – ZB14A

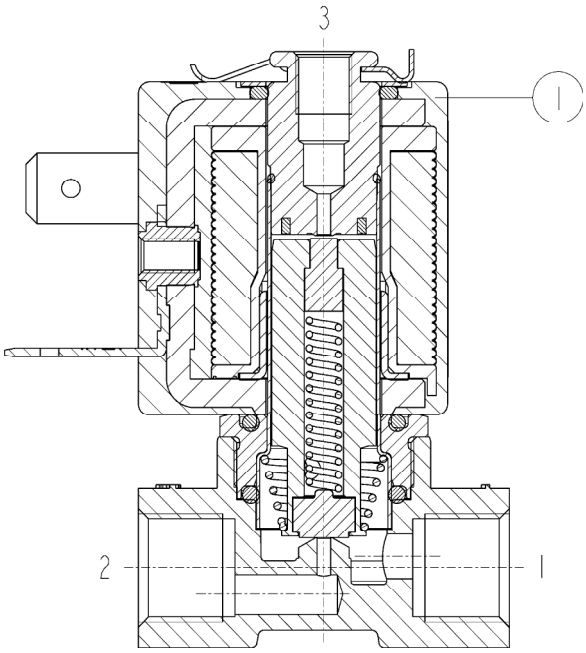

Kit description	Kit P.N.	Consisting of:
Coil	ZB10A ZB12A ZB14A	Coil pos.1

▶ INSTALLATION

- Solenoid valve can be mounted in any position; vertical with coil upwards preferred.

THE VALIDITY OF REPORTED DATA IS REFERRED TO THE DATE OF ISSUE. POSSIBLE UPDATES ARE AVAILABLE ON REQUEST