DIFFERENTIAL PRESSURE PRESSOSTAT

Swiss based Trafag is a leading international supplier of high quality sensors and monitoring instruments for measurement of pressure and temperature.

Applications

- Shipbuilding
- Engine manufacturing
- Railways
- Machine tools
- Hydraulics

Features

- Rugged aluminium housing
- Protection IP65
- Any mounting position possible

06/2020
Data sheet H72253r
Subject to change

Technical Data			
Measuring principle	Bellow	Repeatability	± 1.0 % FS typ.
Measuring range	-1 ... 6 to -1 ... 18 bar	Media temperature	-40°C ... +150°C
Differential pressure	-0.6 ... 3.4 to 1 ... 16 bar	Ambient temperature	-25°C ... +70°C
Output signal	1 Floating change-over contact (SPDT)	Approval / conformity	ABS, BV, CCS, DNV-GL, KRS, LRS, RINA EN60730-1/ EN60730-2-6: Typ 2.B.H
Switching differential	Not adjustable		

Trafag Sensors & Controls
Switzerland

Industriestrasse 11
8608 Bubikon

Tel. +41 44 922 32 32
Fax +41 44 922 32 33

www.trafag.com
trafag@trafag.com

trafag sensors controls

Ordering information/type code

		XXX	XX	XX	XXX	XX	XX
Custom build code	With display and adjusting screw	920					
	Without display, with adjusting screw	924					
	With display and adjusting knob	932					
Microswitch	Small switching differential, standard vibration resistance [1) 2)]		10				
	Average switching differential, standard vibration resistance [1)]		11				
	Average switching differential, increased vibration resistance [1)]		23				
	Large switching differential, high vibration resistance [1)]		26				
	With gold plated contacts, standard vibration resistance [1)]		21				

Range

Range [bar]	Differential pressure [bar]	Over pressure [bar]	Burst pressure [bar]	
-1 ... 6	-0.6 ... 3.4	12	26	74
-1 ... 6	0 ... 4	12	26	76
-1 ... 8	0 ... 6	12	26	77
-1 ... 12	1 ... 10	24	36	78
-1 ... 18	1 ... 16	24	36	79

Sensor

Sensor material	Sensor housing material	Range	Thread	
Bellows: 1.4435, medium contact. parts 1.4435	Brass nickel plated	74	G1/4" female	830
Bellows: 1.4435, medium contact. parts 1.4435	Brass nickel plated	74	G1/8" female	831
Bellows: 1.4435, medium contact. parts 1.4435	Brass nickel plated	74	G1/2" male	832
Bellows: 1.4435, medium contact. parts 1.4435	Brass nickel plated	76, 77	G1/8" female	833
Bellows: 1.4435, medium contact. parts 1.4435	Brass nickel plated	76, 77	G1/2" male	834
Bellows: 1.4435, medium contact. parts 1.4435	Brass nickel plated	76, 77	G1/4" female	837
Bellows: 1.4435, medium contact. parts 1.4435	Brass nickel plated	78, 79	G1/8" female	835
Bellows: 1.4435, medium contact. parts 1.4435	Brass nickel plated	78, 79	G1/2" male	836
Bellows: 1.4435, medium contact. parts 1.4435	Brass nickel plated	78, 79	G1/4" female	838
Bronze	Brass	74	G1/4" female	930
Bronze	Brass	74	G1/8" female	931
Bronze	Brass	74	G1/2" male	932
Bronze	Brass	76, 77	G1/8" female	933
Bronze	Brass	76, 77	G1/2" male	934
Bronze	Brass	76, 77	G1/4" female	937
Bronze	Brass	78, 79	G1/8" female	935
Bronze	Brass	78, 79	G1/2" male	936
Bronze	Brass	78, 79	G1/4" female	938
Bronze	Brass chemically nickel plated	74	G1/4" female	980
Bronze	Brass chemically nickel plated	74	G1/8" female	981
Bronze	Brass chemically nickel plated	74	G1/2" male	982
Bronze	Brass chemically nickel plated	76, 77	G1/8" female	983
Bronze	Brass chemically nickel plated	76, 77	G1/2" male	984
Bronze	Brass chemically nickel plated	76, 77	G1/4" female	987
Bronze	Brass chemically nickel plated	78, 79	G1/8" female	985
Bronze	Brass chemically nickel plated	78, 79	G1/2" male	986
Bronze	Brass chemically nickel plated	78, 79	G1/4" female	988

Fixing	Direct on sensor or housing	00
	By mounting bracket	31

		XXX	XX	XX	XXX	XX	XX
Accessories	Lead seal (manipulation protection)						**16**
	Screwed cable gland M20x1.5 (EN50262)						**07**
	Screwed cable gland M24x1.5 (DIN89280)						**27**
	Screwed cable gland M18x1.5 (DIN89280)						**40**
	Adapter G1/8" male - G1/2" male, Brass						**A6**
	Adapter G1/8" male - G1/2" male, Brass nickel plated						**B6**
	Adapter G1/8" male - G1/2" male, Stainless steel 1.4435						**D6**
	Adapter G1/8" male - G1/4" female, Brass						**A5**
	Adapter G1/8" male - G1/4" female, Brass nickel plated						**B5**
	Adapter G1/8" male - G1/4" female, Stainless steel 1.4435						**D5**
	Damping elements and snubber see data sheet H72258						

[1] Switching differential not adjustable
[2] Not suitable for applications under vibration

Standard products (extra short lead time)

Product No.	Type Code	Pressure range [bar]	Differential pressure [bar]	Over pressure max. [bar]	Switching differential [bar]	Length X [mm]
PD3.4	920 2374 931	-1 ... +6	-0.6 ... +3.4	12	0.16 (fixed)	77
PD6	920 2377 933	-1 ... +8	0 ... 6	12	0.16 (fixed)	77
PD16	920 2379 935	-1 ... 18	1 ... 16	24	0.4 (fixed)	87

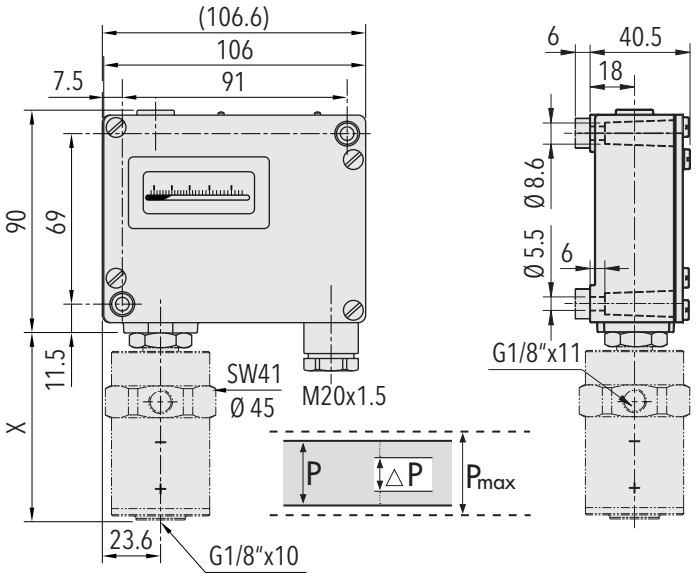

Specifications

Accuracy	Repeatability	± 1.0 % FS typ.
	Scale accuracy typ.	± 2.0 % FS typ.
	Switching differential	See table
	Adjustment range switch point [1]	0 ... 100% Differential pressure
Environmental conditions	Ambient temperature	-25°C ... +70°C
	Media temperature	-40°C ... +150°C
	Storage temperature	-25°C ... +85°C
	Protection	IP65
	Humidity	Max. 95 % relative
	Vibration	Switch 23/26: 5...25 Hz: ±1.6 mm 25...100 Hz: 4 g
	Shock	50 g / 11 ms
Mechanical Data	Sensor	See ordering information
	Housing	AlSi10Mg/ Epoxy coated
	Sealing	NBR
	Screwed cable gland	Brass nickel plated
	Mounting torque	Max. 25 Nm
	Installation	any position
	Weight	~ 610 g
Microswitch	Rating	See table
	Resistance of insulation	> 2 MΩ
	Dielectric strength	U ≤ 250V: 1.45 kV/ U ≤ 500V: 2 kV terminal ground
	Life time (mechanical)	Microswitch 10/11: 20 Mio. cycles Microswitch 21: 0.5 Mio. cycles Microswitch 23/26: 0.3 Mio. cycles
Electrical connection	Electrical connections	Screw terminal
	Cable gland	M20x1.5 Cable-Ø 6...13 mm
	Terminal screw	3 x 1.5...4 mm²

[1] Other adjustment ranges upon request

Additional information

Documents	Data sheet	www.trafag.com/H72253
	Instructions	www.trafag.com/H73256
	Flyer	www.trafag.com/H70914

Dimensions

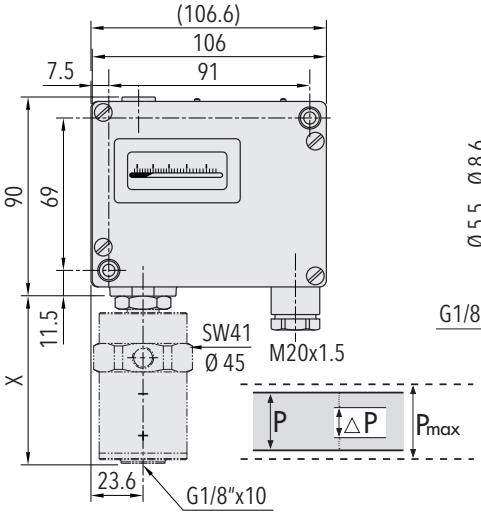

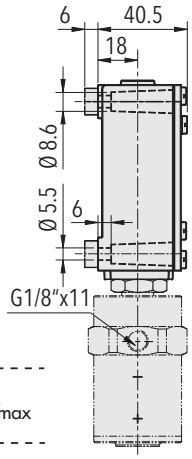

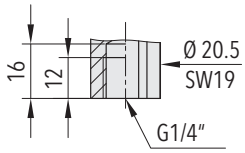

G1/4" female

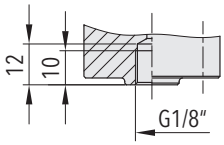

G1/8" female

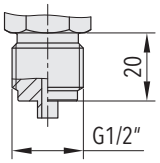

G1/2" male

Dimension X and Y see data sheet H72271

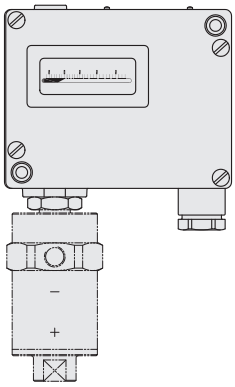

920.XX.XX.XXX.XX.XX

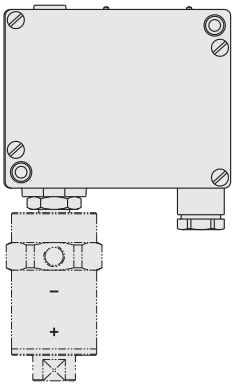

924.XX.XX.XXX.XX.XX

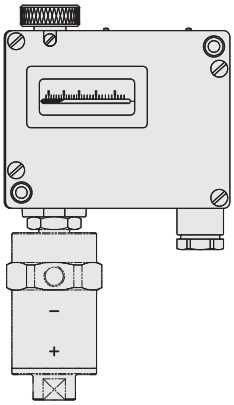

932.XX.XX.XXX.XX.XX

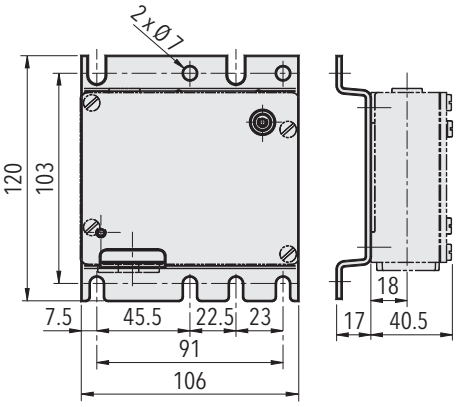

9XX.XX.XX.XXX.**31**.XX

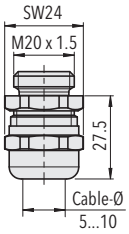

9XX.XX.XX.XXX.XX.**07**
M20x1.5

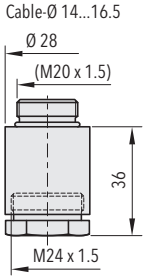

9XX.XX.XX.XXX.XX.**27**
M24x1.5

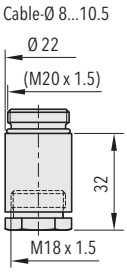

9XX.XX.XX.XXX.XX.**40**
M18x1.5

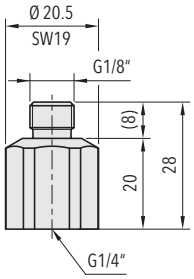

A5 / B5 / D5

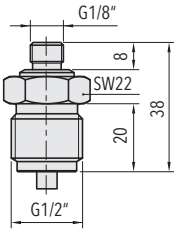

A6 / B6 / D6

Switching differential typ. @ 25°C			
Range of piston sensor	**[bar]**	**-1 ... 6** **-1 ... 8**	**-1 ... 12** **-1 ... 18**
Microswitch 10 Switching differential (not adjustable)	**[bar]**	0.08	0.2
Microswitch 11/21/23 Switching differential (not adjustable)	**[bar]**	0.16	0.4
Microswitch 26 Switching differential (not adjustable)	**[bar]**	0.25	0.5

Electrical data switch			
		Rating Resistive Load (Inductive Load)	
Type	**Features**	**AC**	**DC**
10	Small switching differential (not recommended for applications under vibrations)	125 V, 10 (1.5) A 250 V, 10 (1.25) A	250 V, 0.2 (0.02) A 125 V, 0.4 (0.03) A 30 V, 2 (1) A 14 V, 15 (2.5) A
11	Average switching differential, standard vibration resistance	125 V, 15 (1.5) A 250 V, 15 (1.25) A 500 V, 10 (0.75) A	250 V, 0.25 (0.03) A 125 V, 0.5 (0.05) A 30 V, 6 (1.5) A 14 V, 15 (1.5) A
23	Average switching differential, increased vibration resistance	125 V, 15 (1.5) A 250 V, 15 (1.25) A 500 V, 10 (0.75) A	250 V, 0.3 (0.05) A 125 V, 0.6 (0.1) A 30 V, 15 (1.5) A 14 V, 15 (1.5) A
26	Large switching differential, high vibration resistance	125 V, 15 (1.5) A 250 V, 15 (1.25) A 500 V, 10 (0.75) A	250 V, 0.3 (0.2) A 125 V, 0.75 (0.4) A 30 V, 15 (1.5) A 14 V, 15 (1.5) A
21	With gold plated contacts, standard vibration resistance	24 V, 0.1 (0.1) A 12 V, 1.0 (1.0) A 5 V, 2.0 (2.0) A	24 V, 0.1 (0.1) A 12 V, 1.0 (1.0) A 5 V, 2.0 (2.0) A

Electrical Connection

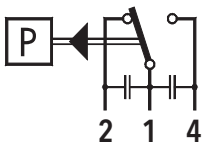

Switch 10/11/23

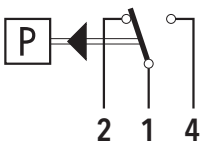

Switch 21/26