Diamant PRO

MOTORIZED VALVES

USE

The **Diamant PRO** motorized valve is specifically used for the interception and regulation of fluids in:

- **open and closed hydraulic systems**
- **zone heating/cooling systems**
- **drinking water systems, with suitable valve body**
- **systems using alternative energy**
- **thermal solar systems**
- **industrial systems in general, using hot and cold fluids**
- **automation systems**

The special feature of all the actuators of the **PRO Range** is the fact that they can be used in **harsh environments and severe weather conditions.**

All **Diamant PRO** *motorised valves are equipped with an "**ALL IN ONE**" system, which allows to set the **2-POINT or 3-POINT** electrical control with a **jumper-type** selector, **according to the user's needs.***

patented "ALL IN ONE" system

Actuators

Diamant PRO actuator is available in the following versions

COMPARATO connection

ISO 5211 connection

TECHNICAL FEATURES	Diamant PRO			
Electric control	ALL IN ONE			
	3-point		2-point	
Connection with valve body	COMPARATO connection	ISO 5211 connection	COMPARATO connection	ISO 5211 connection
Operation	modulating / ON/OFF		ON/OFF	
Rotation	90° clockwise and counterclockwise			
	180° clockwise and counte clockwise			
Compatible valve bodies (see diameters in the "Valve bodies" section)	2-way			
	3-way with switch			
	3-way with mixer		-	
	by-pass			
Position indicator	arrow indicating the ball position			
Motor	bidirectional - synchronous			
Power supply	230 V ; 50 Hz *			
	110 V ; 50 Hz *			
	24 V ; 50 Hz *			
Electrical connection	by means of a terminal block inside the actuator			
Operating time (∠ 90°) and rated torque (for a 180° operation, double the provided times)	4 seconds ; 5 Nm			
	12 seconds ; 11 Nm			
	35 seconds ; 11 Nm (standard version)			
	106 seconds ; 11 Nm			
	320 seconds ; 11 Nm			

* *for 60 Hz versions, please contact our Technical Office*

to be continued (next page)

Diamant PRO

MOTORIZED VALVES

Actuators

COMPARATO connection

ISO 5211 connection

TECHNICAL FEATURES	Diamant PRO	
Input power (35, 106, 320-second version)	6 VA (230 V ; 50 Hz version)	
	6 VA (110 V ; 50 Hz version)	
	7,5 VA (24 V ; 50 Hz version)	
Input power (4 and 12-second version)	13 VA (230 V ; 50 Hz version)	
	11 VA (110 V ; 50 Hz version)	
	12 VA (24 V ; 50 Hz version)	
Maximum current on the outlet phase to terminals 4 and 5	1 A resistive	
Maximum current tolerated by extra microswitches	1 A resistive	
Maximum noise (at a 1 meter distance)	35 dB(A) standard version	
Operational room temperature	- 10° C ÷ 50° C	
Fluid temperature	see page 14-15	
Protection degree	IP67	
External covering	featuring a ribbed surface, in a glass-reinforced "polyarylamide" techno-polymer, particularly sturdy and damp-proof	PRO RANGE SPECIFIC FEATURES
Material of external metal components	AISI 303 GVR and brass CW617N	
Washers material	silycone	
Type of reduction unit	top performance COMPARATO	
Maintenance	none	
Storage and transport conditions	- 40° C ÷ 80° C, UR max 95% - no condensation	
Certification	EC	

ACCESSORIES UPON REQUEST

- Actuator override, to activate the valve in case of emergency or black-out (not available for 4 and 12-second version).
- One additional opening feedback microswitch (free contact diverter) .
  Example of use: notification of opening, pump relay actuation, boiler control, notification to PLC, etc.)
- One additional closing feedback microswitch (free contact diverter).
  Example of use: notification of closing, relay actuation, notification to PLC, etc.
- Insulation spacers with and without manual override (see "Valve bodies" section).
- Anti-condensation resistance, for preventing the risk of condensation inside the actuator.
- Cable gland PG 13,5.

Microswitches
EXTRA

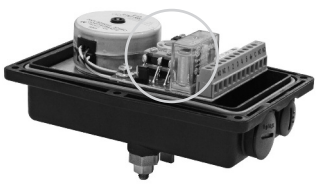

Manual override from the top

Cable gland PG 13,5

Anti-condensation resistance

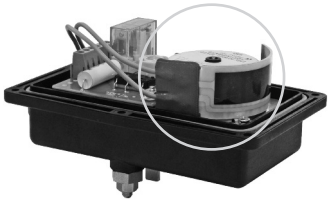

Diamant PRO

MOTORIZED VALVES

ELECTRICAL CONNECTIONS

2-POINT CONTROL – ON/OFF (SWITCH)

- terminal 1: neutral;
- terminal 2: **fixed** closing phase;
- terminal 3: opening phase.

The phase to terminal 3 can be supplied by means of a switch.
One electric control can activate several actuators.

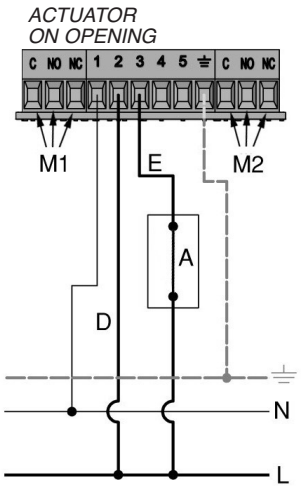

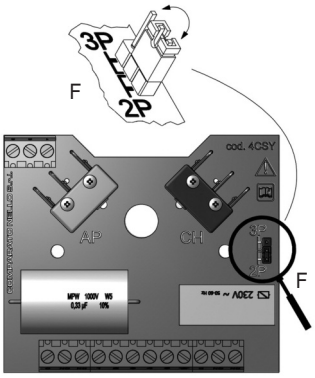

Get the Jumper in position of the image for the desired electrical connection

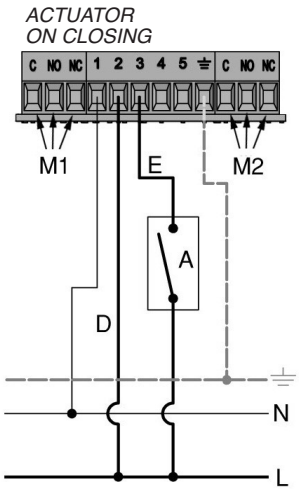

KEY:
1 - Neutral
2 - Closing phase
3 - Opening phase
4 - Outlet opening phase
5 - Outlet closing phase

A - Switch-type control
D - Closing
E - Opening
F - Jumper
⏚ - Earth

C - Common
NO - Normally open
NC - Normally closed
M1 - Opening extra microswitch
M2 - Closing extra microswitch

The figures show the wiring diagram of the actuator with **2-POINT ON/OFF** control device.

The wiring diagram is shown open and closed, respectively. Supplying power by means of a phase across terminal 2 causes the valve to close (electrical automatic closing); supplying power across terminal 3, too, causes the valve to open.

3-POINT CONTROL – ON/OFF (DIVERTER)

- terminal 1: neutral;
- terminal 2: closing phase;
- terminal 3: opening phase.

Phase shall be diverted to terminal 2 or terminal 3.
Each actuator must be operated by a single electric control.

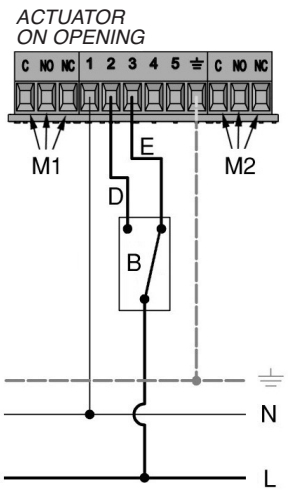

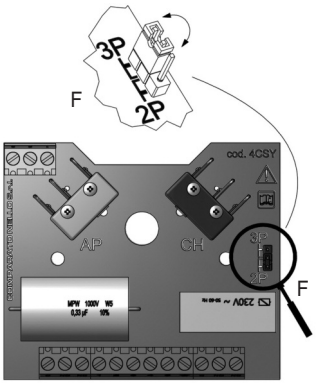

Get the Jumper in position of the image for the desired electrical connection

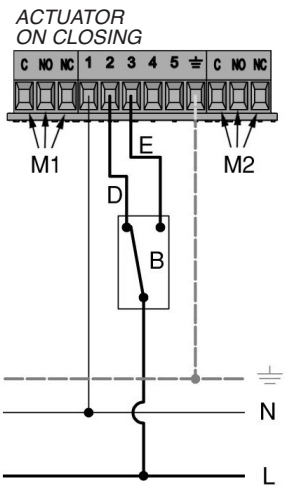

KEY:
1 - Neutral
2 - Closing phase
3 - Opening phase
4 - Outlet opening phase
5 - Outlet closing phase

B - Switch-type control
D - Closing
E - Opening
F - Jumper
⏚ - Earth

C - Common
NO - Normally open
NC - Normally closed
M1 - Opening extra microswitch
M2 - Closing extra microswitch

The figures show the wiring diagram of the actuator with **3-POINT ON/OFF** control device.

The wiring diagram is shown open and closed, respectively. When the phase flows across terminal 3, the valve opens; on the contrary, when the phase flows across terminal 2, the valve closes.

Diamant PRO

MOTORIZED VALVES

ELECTRICAL CONNECTIONS

3-POINT CONTROL – MODULATING (2 SWITCHES)

• terminal 1: neutral; • terminal 2: closing phase; • terminal 3: opening phase.

The phase can be diverted to terminal 2, terminal 3 or to none of them, in order to obtain partial openings of the valve. This is necessary for modulating the flow when a regulation is needed. **Each actuator must be operated by a single electric control.**

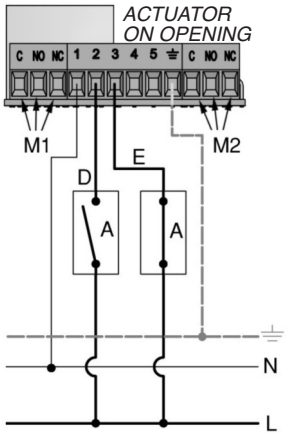

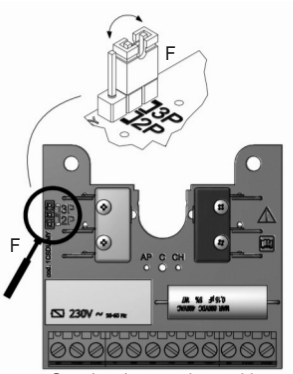

Get the Jumper in position of the image for the desired electrical connection

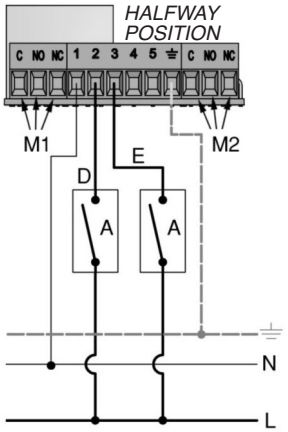

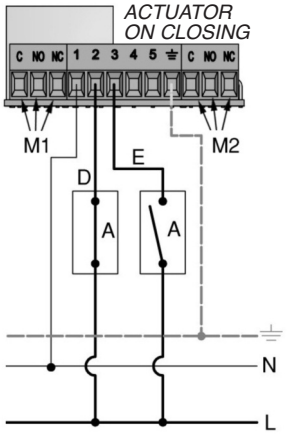

KEY:

1 - Neutral
2 - Closing phase
3 - Opening phase
4 - Outlet opening phase
5 - Outlet closing phase

A - Switch-type control
D - Closing
E - Opening
F - Jumper
⏚ - Earth

OPTIONAL

C - Common
NO - Normally open
NC - Normally closed
M1 - Opening additional microswitch
M2 - Closing additional microswitch

The figures show the wiring diagram of the actuator with **3-POINT MODULATING** control device.

The wiring diagram is shown in an open, closed and intermediate position, respectively. When the phase flows across terminal 3, the valve opens; on the contrary, when the phase flows across terminal 2, the valve closes. When there is no phase on the above mentioned terminals, the actuator can take intermediate positions between the points of complete closure and complete opening, allowing a modulating operation.

Should power fail, the actuator remains in the position it was when the power outage occurred.

The layout of the extra (optional) microswitch contacts is shown in the following figures.

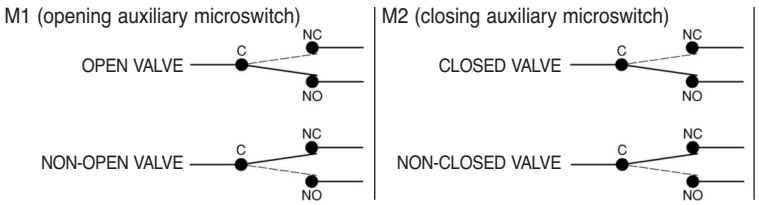

Diamant PRO actuators have the following features:

• outlet phase to terminal 4 with open valve, to be used as a remote control (notification of opening, pump relay actuation, etc.);
• outlet phase to terminal 5 with closed valve, to be used as a remote control (notification of closing);

EXAMPLES OF ELECTRICAL CONNECTIONS

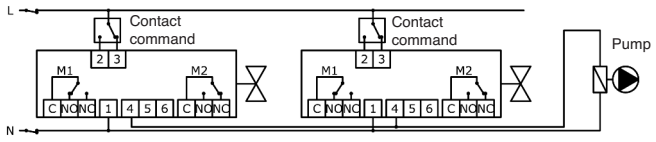

M1 EXTRA MICRO SWITCH FREE IN OPENING POSITION (UPON REQUEST)
M2 EXTRA MICRO SWITCH FREE IN CLOSING POSITION (UPON REQUEST)

Connection of the pump stop with two 3-point actuators

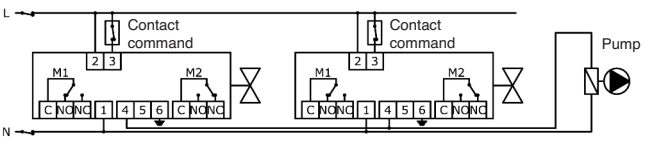

M1 EXTRA MICRO SWITCH FREE IN OPENING POSITION (UPON REQUEST)
M2 EXTRA MICRO SWITCH FREE IN CLOSING POSITION (UPON REQUEST)

Connection of the pump stop with two 2-point actuators

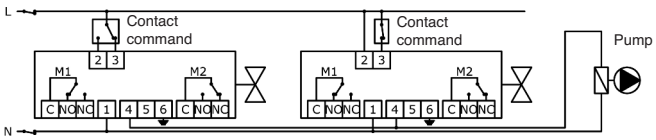

M1 EXTRA MICRO SWITCH FREE IN OPENING POSITION (UPON REQUEST)
M2 EXTRA MICRO SWITCH FREE IN CLOSING POSITION (UPON REQUEST)

Connection of the pump stop with a 3-point and 2-point actuator

Diamant PRO

MOTORIZED VALVES

MANUAL OPENING

The **Diamant PRO** can be equipped with manual override from the top (with the exception of the version with 4 and 2-second operating time).

The manual override allows to activate the valve in case of emergency or black-out.

Actuator in **OPEN** position.

Press the unlock button (a) and, at the same time, rotate the lever (b) of 90° **COUNTERCLOCKWISE,** in order to bring the actuator in the **CLOSING** position.

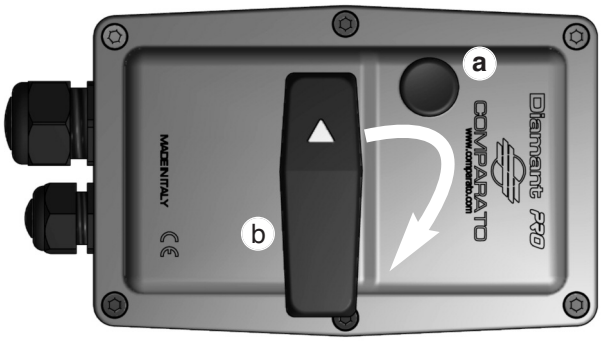

Actuator in **CLOSED** position.

Press the unlock button (a) and, at the same time, rotate the lever (b) of 90° **COUNTERCLOCKWISE,** in order to bring the actuator in the **OPENING** position.

INSTALLATION

The valve should be installed in such a way that the actuator connection is not facing down.

When the valve works with low-temperature fluids (possible frost formation on the valve stem) or with high-temperature fluids (danger of actuator overheating), it is advisable to install it in the recommended position, as shown in the picture.

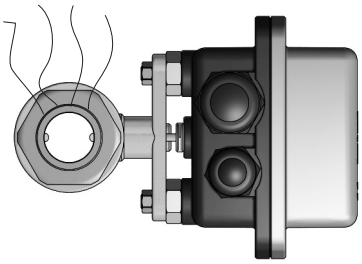

RECOMMENDED POSITION

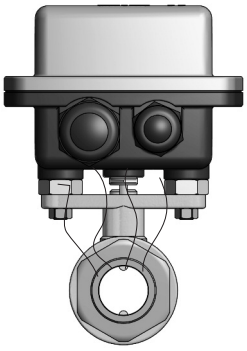

ALLOWED POSITION

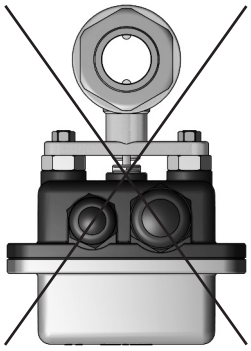

FORBIDDEN POSITION

WARNING!

Do not wash directly on actuator at high pressure (i.e. pressure washer)

Diamant PRO

MOTORIZED VALVES

CONNECTION TO THE VALVE BODY

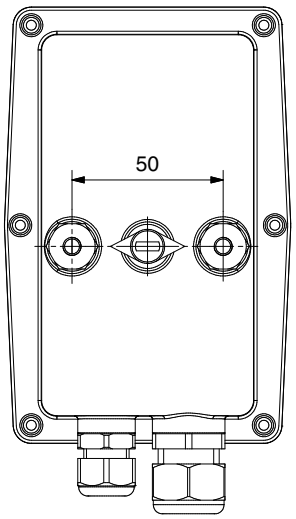

COMPARATO CONNECTION

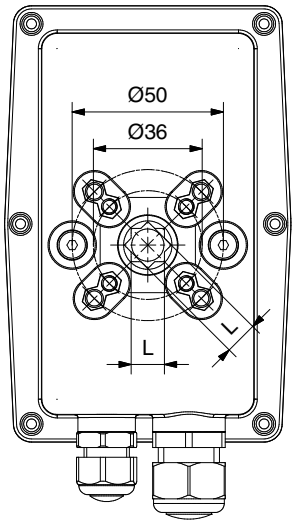

ISO 5211 CONNECTION

The **ISO 5211** connection on the **Diamant PRO** has the following sizes:

ISO 5211 connection	L
F03	9 mm
F05	11 mm

Valve bodies with tangs COMPARATO CONNECTION

BRASS Valve bodies

2-WAY · FULL FLOW
Ø 1/2" • 3/4" • 1"

3-WAY · DIVERTER / MIXER · FULL FLOW
Ø 3/4" • 1"

BY-PASS
Ø 3/4" • 1"

Male connections are all provided with tang, which is extremely convenient during the installation and allows to position the valve body and then the actuator properly; moreover, it helps performing any maintenance work.

The ball cut-off ensures the best hydraulic tightness and reduced pressure loss

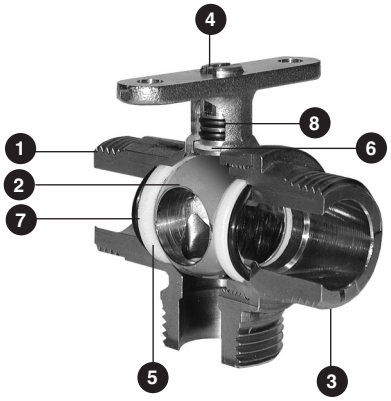

MATERIAL USED IN THE VALVE BODY

1	BODY	BRASS CW617N UNI 5705
2	BALL	BRASS CW617N UNI 5705 CHROMED NIKEL
3	COUPLING	BRASS CW617N UNI 5705
4	CONTROL ROD	BRASS CW617N UNI 5705
5	BALL SEAL	P.T.F.E.
6	ROD SEAL	P.T.F.E.
7	BALANCING O-RING	EPDM
8	CONTROL ROD O-RING	EPDM

Diamant PRO

MOTORIZED VALVES

BRASS Valve Bodies WITH INSULATION SPACER AND MANUAL OVERRIDE

The valve bodies which are suitable for **Diamant PRO** can be equipped with spacers to protect the valve and insulate the actuator from the thermal conduction coming from the valve body. Moreover, the above mentioned spacers can be provided with a lever which enables manual opening and closing operations.

2-WAY · FULL FLOW
Ø 1/2" • 3/4" • 1"
with spacer for insulation

2-WAY · FULL FLOW
Ø 1/2" • 3/4" • 1"
with spacer for insulation
and manual override

3-WAY · DIVERTER / MIXER · FULL FLOW
Ø 3/4" • 1"
with spacer for insulation

3-WAY DIVERTER / MIXER · FULL FLOW
Ø 3/4" • 1"
with spacer for insulation
and manual override

2-WAY valve bodie

The valve body can be mounted in both flow directions, without distinction

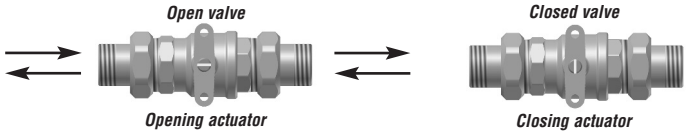

3-WAY diverter/mixer valve bodies

The 3-way version of **Diamant PRO** is available with two different balls. In both cases one of the holes is positioned on the common way, which is therefore always open

MIXER VALVE BODY (3-HOLE BALL)

It has a 3-hole ball with one hole pointed towards the common way (always open) and two more holes which are orthogonal to the first one and to each other. When one of these two holes is pointed towards one of the two inlets, the second inlet is closed.

By means of a rotation of 90° of the ball, the second hole points towards the second inlet and closes the first one.

One of the special features of the 3-hole ball valve is the fact that the 3 ways can communicate simultaneously, during the ball rotation from one deviation position to another. At the end of the operation, the valve is a diverter again, for all practical purposes; therefore, the use of the 3-way 3-hole diverter valve is advisable when the diverted ways can communicate.

This is generally the case of heating systems. Moreover, the above mentioned condition allows this valve to be used for mixing. On the control rod there are two symbols **(two dots and a dash)** which indicate which way is **communicating to the common one.**

MIXER - 3 HOLES
C = COMMON WAY

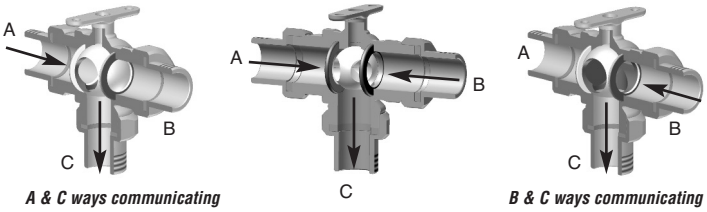

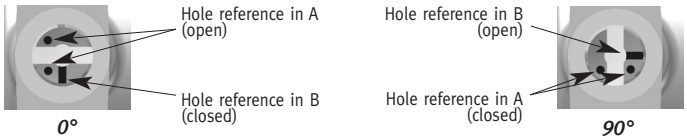

DIVERTER VALVE BODY (2-HOLE BALL)

In a **2-hole** ball, the first hole is positioned on one of the two inlets: a 180° rotation is necessary in order to point it to the other inlet.

One of its features is the fact that one of the two inlets closes before the the one opens, so that the two ways never communicate.

The 3-way, **2-hole** iverter valve is necessary when the two diverted ways must never communicate.

On the control rod there is a symbol **(two dots)** ch indicates which way **is communicating to the common one.**

DIVERTER - 2 HOLES
C = FLUID INLET

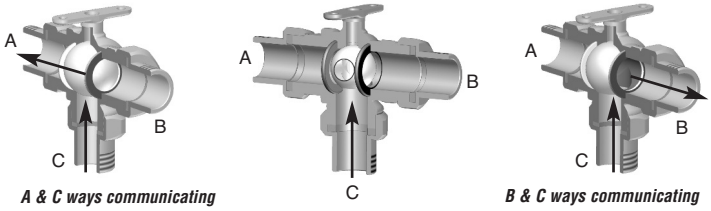

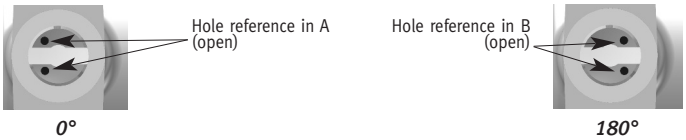

Diamant PRO

MOTORIZED VALVES

BY-PASS valve bodies

In by-pass valves, the cut-off consists of a ball with a through hole, as in 2-way ones.

One of the features that distinguishes the by-pass ball from the 2-way ball is a milling which allows the recirculation of part of the outlet flow towards the return line when the valve is closed.

Therefore, in by-pass valves it is important to recognize the flow direction.

On the control rod there is a symbol (a dash) which indicates the position of the milling on the ball; when the valve is closed, it must always be oriented towards the direction of the incoming flow.

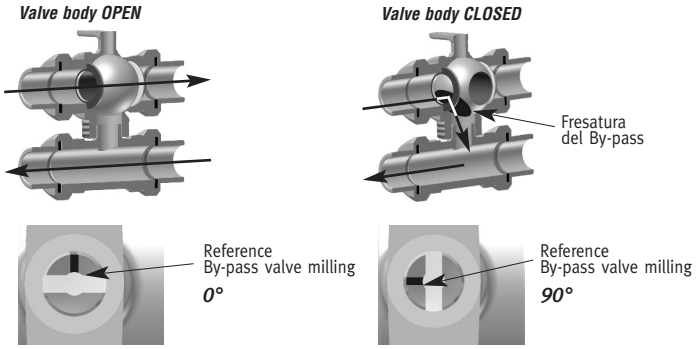

The actuator rotates **90° COUNTERCLOCKWISE** in order to move from the open position to the closed position

ISO 5211 FEMALE valve bodies

BRASS valve bodies WITH INSULATION SPACER AND MANUAL OVERRIDE

suitable for distinctive temperature industrial conditions
(glycol cooling systems, industrial systems in general with hot and cold fluids)

2-WAY · FULL FLOW
Ø 1/4" • 3/8" • 1/2" • 3/4" • 1" • 1"1/4
with spacer for insulation

2-WAY · FULL FLOW
Ø 1/4" • 3/8" • 1/2" • 3/4" • 1" • 1"1/4
with spacer for insulation and manual override

DIVERTER / MIXER FULL FLOW
Ø 1/2" • 3/4" • 1"
with spacer for insulation

DIVERTER / MIXER FULL FLOW
Ø 1/2" • 3/4" • 1"
with spacer for insulation and manual override

3-WAY · REDUCED FLOW
Ø 1/2" • 3/4"
with spacer for insulation

3-WAY · REDUCED FLOW
Ø 1/2" • 3/4"
with spacer for insulation and manual overrid

AISI 316 valve bodies WITH INSULATION SPACER AND MANUAL OVERRIDE

suitable for distinctive temperature industrial conditions
(glycol cooling systems, industrial systems in general with hot and cold fluids)

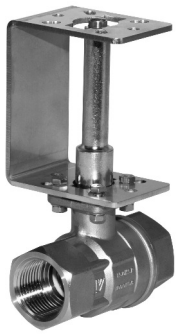

2-WAY · FULL FLOW
Ø 1/2" • 3/4" • 1"
with spacer for insulation

2-WAY · FULL FLOW
Ø 1/2" • 3/4" • 1"
with spacer for insulation and manual override

3-WAY · REDUCED FLOW
Ø 1/4" • 3/8" • 1/2"
with spacer for insulation

3-WAY· REDUCED FLOW
Ø 1/4" • 3/8" • 1/2"
with spacer for insulation and manual override

NOTES Valve body with spacer, to be combined with the COMPARATO CONNECTION actuator.

Diamant PRO

MOTORIZED VALVES

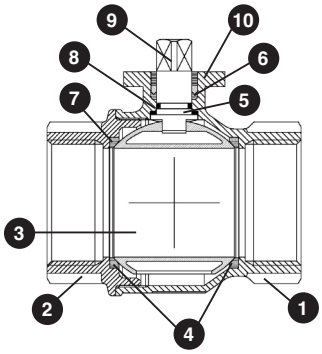

MATERIAL USED IN THE 2-WAY F/F ISO 5211 BRASS VALVE BODY

1	BODY	BRASS CW617N UNI EN 12165
2	COUPLING	BRASS CW617N UNI EN 12165
3	BALL	BRASS CW617N UNI EN 12165
4	BALL SEAL	P.T.F.E.
5	ANTI-FRICTION SEAL	P.T.F.E.
6	ROD SEAL	P.T.F.E.
7	O-RING	FKM
8	O-RING	FKM
9	CONTROL ROD	BRASS CW617N UNI EN 12165
10	ISO 5211 FLANGE	BRASS CW617N UNI EN 12165

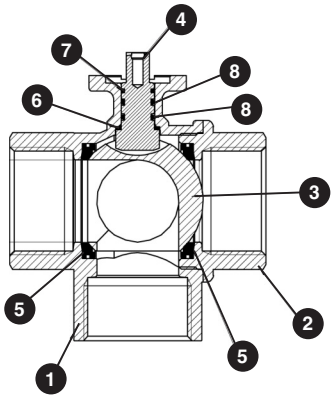

MATERIAL USED IN THE 3-WAY F/F/F ISO 5211 DEVIATING/MIXING BRASS VALVE BODY

1	BODY	BRASS CW617N UNI EN 12165
2	COUPLING	BRASS CW617N UNI EN 12165
3	BALL	BRASS CW617N UNI EN 12165
4	CONTROL ROD	P.T.F.E.
5	BALL SEAL	P.T.F.E.
6	ANTI-FRICTION SEAL	P.T.F.E.
7	O-RING	FKM
8	O-RING	FKM

MATERIAL USED IN THE 3-WAY F/F/F ISO 5211 BRASS VALVE BODY

1	BODY	BRASS CW617N UNI EN 12165
2	COUPLING	BRASS CW617N UNI EN 12165
3	BALL	BRASS CW617N UNI EN 12165
4	BALL SEAL	P.T.F.E.
5	ANTI-FRICTION SEAL	P.T.F.E.
6	ROD SEAL	P.T.F.E.
7	O-RING	FKM
8	O-RING	FKM
10	CONTROL ROD	BRASS CW617N UNI EN 12165

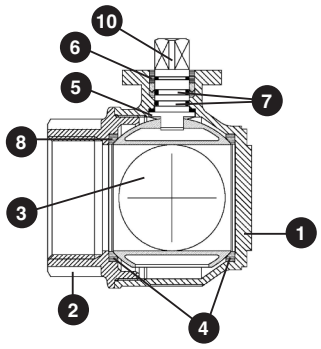

MATERIAL USED IN THE 3-WAY F/F/F AISI 316 ISO 5211 VALVE BODY

1	BODY	CF8M
2	COUPLING	CF8M
3	BALL	INOX AISI 316
4	BALL SEAL	P.T.F.E.
5	ANTI-FRICTION SEAL	P.T.F.E.
6	ROD SEAL	P.T.F.E.
7	O-RING	FKM
8	O-RING	FKM
10	CONTROL ROD	INOX AISI 316

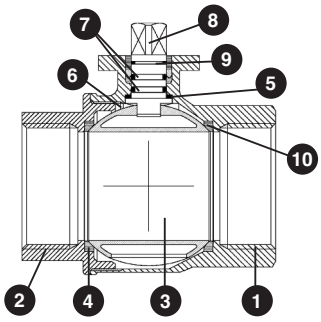

MATERIAL USED IN THE 2-WAY F/F AISI 316 ISO 5211 VALVE BODY

1	BODY	CF8M
2	COUPLING	CF8M
3	BALL	INOX AISI 316
4	BALL SEAL	P.T.F.E.
5	SEAL	P.T.F.E.
6	ROD WASHER	P.T.F.E.
7	O-RING	FKM
8	CONTROL ROD	INOX AISI 316
9	ROD SEAL	P.T.F.E.
10	O-RING	FKM

Diamant PRO

MOTORIZED VALVES

2-WAY valve bodies

The valve body can be mounted in both flow directions, without distinction.

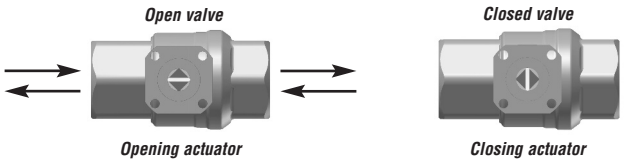

3-WAY diverter/mixer valve bodies

The 3-way version of **Diamant PRO** valves with **ISO 5211** connection is available with two different balls. In both cases, one of the holes is positioned on the common way, which is therefore always open.

MIXER VALVE BODY (3-HOLE BALL)

The mixing valve body is used to mix two fluids (e.g. in order to control the temperature and/or the flow). In a 3-hole ball valve, the second hole is positioned on one of the two inlets and the third hole is orthogonal to the second one: a 90° rotation is necessary in order to point it to the other inlet.

One of the features of ball valves with 3-hole ball is the possibility to close one of the inlets when the other one begins to open. For a short while, during the operating phase, all the three ways are communicating.

At the end of the operation, the valve is a diverter again, for all practical purposes; therefore, the use of the 3-way 3-hole diverter valve is advisable when the diverted ways can communicate.

This is generally the case of heating systems.

On the control rod there are two orthogonal **millings,** which indicate which way **is communicating with the common one.**

DIVERTER VALVE BODY (2-HOLE BALL)

In a **2-hole** ball, the first hole is positioned on one of the two inlets: a 180° rotation is necessary in order to point it to the other inlet.

One of the features of the ball valve with **2 holes** is the fact that one of the two inlets closes before the the one opens, so that the two ways never communicate.

The 3-way, **2-hole** diverter valve is necessary when the two diverted ways must never communicate. On the control rod there is an orthogonal **milling,** which indicates which way **is communicating with the common one.**

MIXER - 3-HOLE

C = COMMON WAY

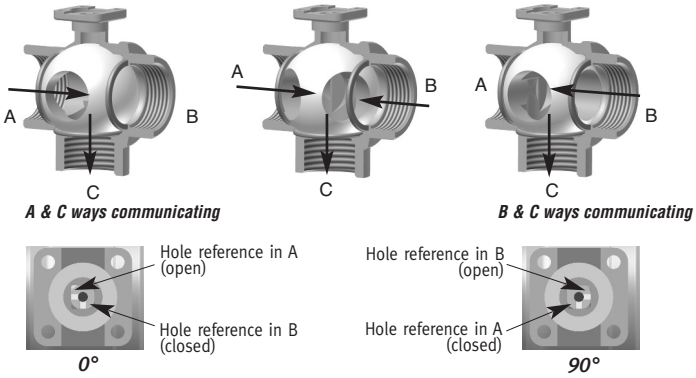

DIVERTER - 2-HOLE

C = FLUID INLET

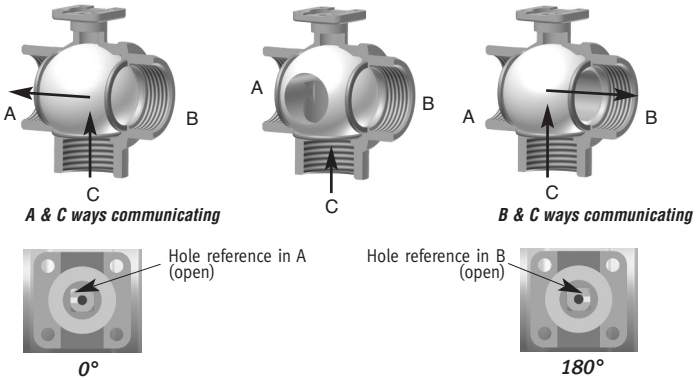

3-WAY valve bodies

"T" BALL

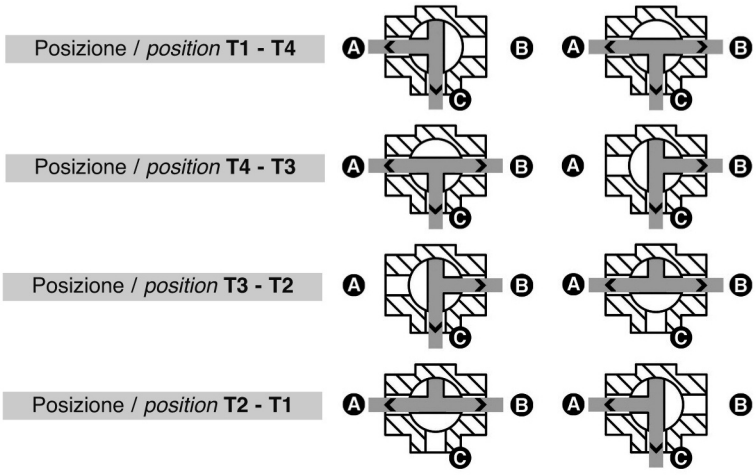

POSIZIONAMENTO SFERA
BALL POSITIONING

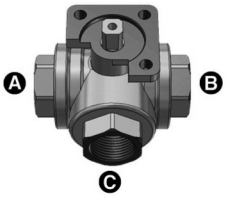

"L" BALL

Posizione / *position* **L2 - L1**

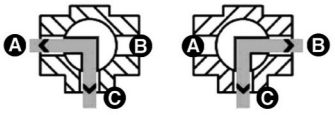

Diamant PRO

MOTORIZED VALVES

PVC valve bodies

Both threaded and glue-on unions are available.
The ball cut-off ensures the best hydraulic tightness and reduced pressure loss.

2-WAY – FULL FLOW

TO BE GLUED	DN	16	20	25	32	40	50
THREADED	Ø	3/8" •	1/2" •	3/4" •	1" •	1"1/4 •	1"1/2

3-WAY • FULL FLOW

TO BE GLUED	DN	16	20	25	32	40	50
THREADED	Ø	3/8" •	1/2" •	3/4" •	1" •	1"1/4 •	1"1/2

NOTES Valve body with spacer, to be combined with the COMPARATO CONNECTION actuator.

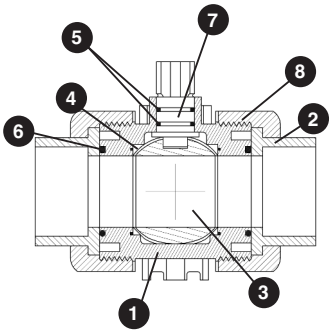

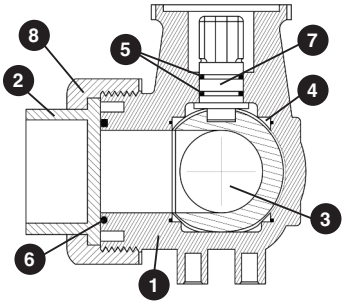

MATERIAL USED
IN THE 2- AND 3-WAY PVC VALVE BODIES

1	BODY	PVCu
2	COUPLING	PVCu
3	BALL	PVCu
4	BALL SEAL	P.T.F.E
5	ROD SEAL	EPDM
6	SEAL	EPDM
7	CONTROL ROD	PVCu
8	COUPLING RING	PVCu

Exploded view FOR THE ASSEMBLY OF SPACER-FITTED MOTORIZED VALVES

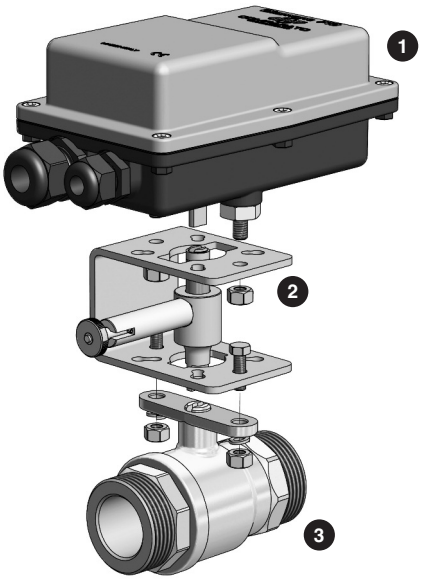

For the evaluation of the overall size of motorized valves, take into account the assembling diagram (next) and the dimensions of each single component, as shown in the following two pages.

When the installation does not require a spacer, directly couple the actuator to the valve; pay attention to couple actuators and valve bodies with the same type of connection ("**COMPARATO**" or "**ISO 5211** connection").

1 : Diamant PRO actuator
2 : Spacer/manual opening
3 : Ball valve

Diamant PRO

MOTORIZED VALVES

OVERALL SIZE [mm]

ACTUATOR MODEL WITH "COMPARATO" CONNECTION

STANDARD MODEL

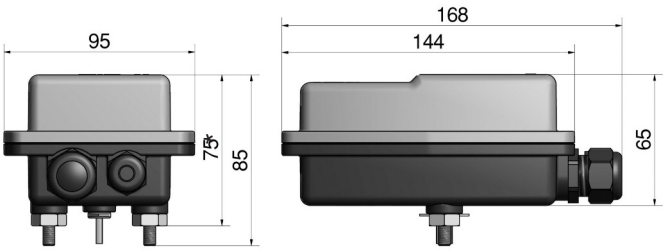

* *the size is to be taken into account when coupling the actuator to the valve body or the spacer*

MODEL WITH MANUAL OVERRIDE

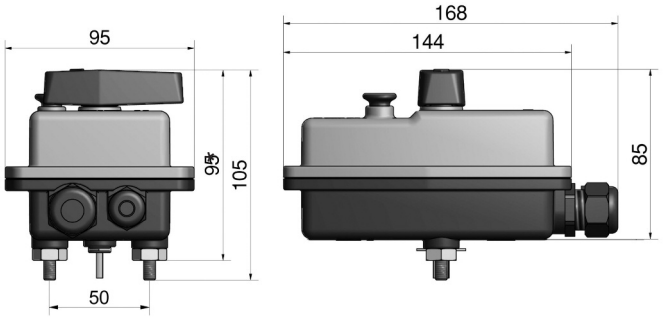

ACTUATOR MODEL WITH ISO 5211 F03 / F05 CONNECTION

STANDARD MODEL

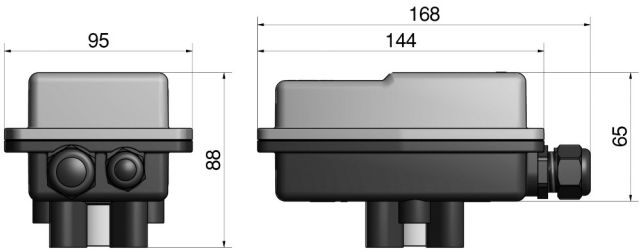

MODEL WITH MANUAL OVERRIDE

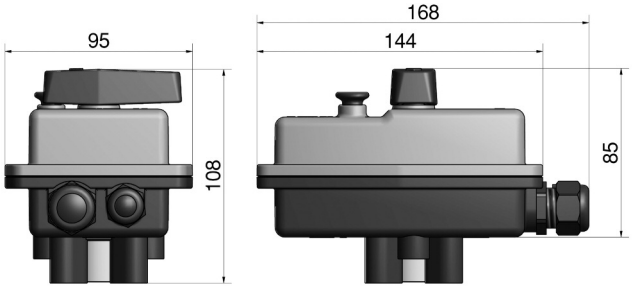

OPTIONAL SPACERS FOR INSULATION AND/OR MANUAL OVERRIDE

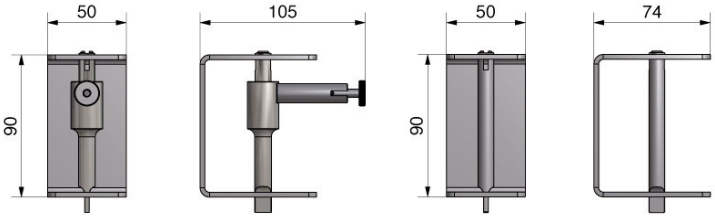

Disponibili anche nelle versioni:

- without control lever for manual override;
- for valve bodies with **ISO 5211** connection (sizes are similar to those of the versions shown).

CORPI VALVOLA

VALVE BODY CONNECTION **COMPARATO**

VALVE BODIES **BRASS**

MODEL	DN	Ø TANGS	Ø VALVE BODIES	A	B	C	D	E
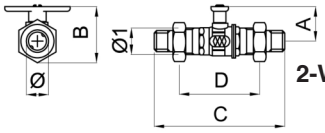 **2-Way**	15	1/2"	3/4"	34	48	133	78	
	20	3/4"	1"	38	58	145	84	
	25	1"	1"1/4	42	66	164	94	
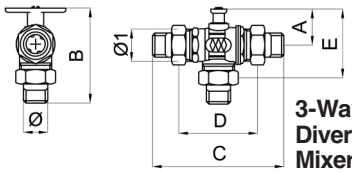 **3-Way Diverter / Mixer**	20	3/4"	1"	38	105	145	84	74
	25	1"	1"1/4	42	117	164	94	82

D - E: *Dimensions refer to the valve body without tangs and caps.*

Diamant PRO

MOTORIZED VALVES

VALVE BODY CONNECTION **COMPARATO**

VALVE BODIES **BRASS**

MODEL	DN	Ø TANGS	Ø VALVE BODIES	A	B	C	D	E
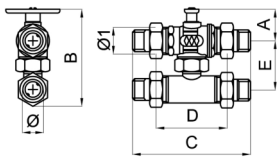 **By-Pass**								
	20	3/4"	1"	38	119	145	84	70
	25	1"	1"1/4	42	119	164	94	81
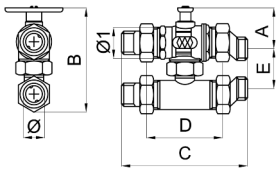 **By-Pass** and eccentric tangs								
	20	3/4"	1"	from 15 to 27	119	145	84	from 58 to 82
	25	1"	1"1/4	from 20 to 32	119	164	94	from 49 to 73

D: *Dimension refers to the valve body without tangs and caps.*

VALVE BODY CONNECTION **ISO 5211**

VALVE BODIES **BRASS**

MODEL	DN	Ø	A	B	C	D
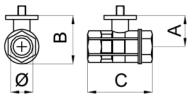 **2-Way**	8	1/4"	33	50	67	
	10	3/8"	33	50	67	
	15	1/2"	33	50	67	
	20	3/4"	35	55	76	
	25	1"	46	71	90	
	32	1"1/4	49	78	102	
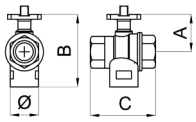 **3-Way Diverter / Mixer**	15	1/2"	31	65	64	
	20	3/4"	42	82	74	
	25	1"	45	92	89	
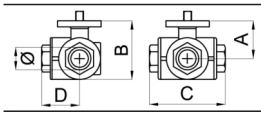 **3-Way**	15	1/2"	33	52	77	39
	20	3/4"	42	66	89	44

VALVE BODIES **AISI 316**

MODEL	DN	Ø	A	B	C	D
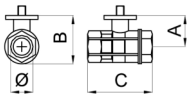 **2-Way**	15	1/2"	33	50	67	
	20	3/4"	35	56	78	
	25	1"	45	71	90	
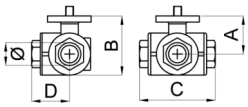 **3-Way**	8	1/4"	32	51	79	39
	10	3/8"	32	51	79	39
	15	1/2"	32	51	79	39

VALVE BODIES **PVC**

MODEL	DN	Ø GLUE-ON mm	Ø THREADED	A	B	C	D
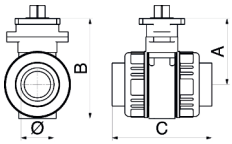 **2-Way**	10	16	3/8"	58	83	78	
	15	20	1/2"	58	83	78	
	20	25	3/4"	65	96	91	
	25	32	1"	74	109	106	
	32	40	1"1/4	79	120	120	
	40	50	1"1/2	87	137	142	
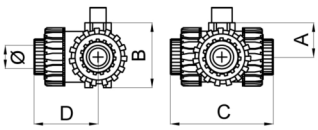 **3-Way**	10	16	3/8"	28	57	118	59
	15	20	1/2"	28	57	118	59
	20	25	3/4"	34	68	148	74
	25	32	1"	36	76	162	81
	32	40	1"1/4	43	90	192	96
	40	50	1"1/2	50	101	220	110

IMPORTANT: *In order to couple PVC valve bodies to the actuator, a spacer needs to be fit in.*

Diamant PRO

MOTORIZED VALVES

BRASS VALVE BODIES
Comparato connection

FLUID-DYNAMIC FEATURES

Kv_S [m³/h] (with Δp = 100kPa = 1bar)

MODEL	Ø	Kv_S	DN	PN
2-Way	1/2"	16,3	15	16
	3/4"	29,5	20	16
	1"	43	25	16
3-Way Diverter/Mixer	3/4"	11,5	20	16
	1"	18,3	25	16
3-Way with TEE by-pass	3/4"	29,5	20	16
	1"	43	25	16

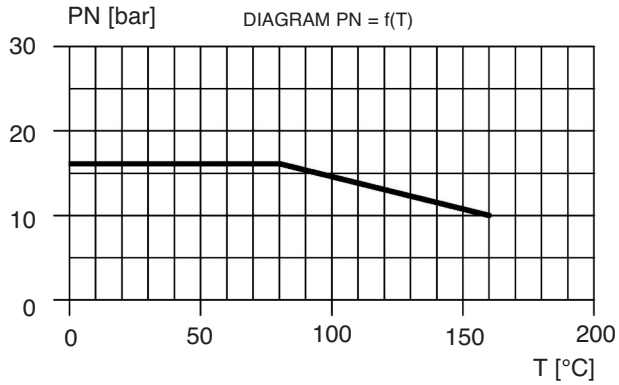

When the value of the flow is known, the general expression for the calculation of pressure losses is the following:

$$\Delta p\,[\text{bar}] = \left[\frac{Q\,[\text{m}^3/\text{h}]}{k_{v_s}}\right]^2$$

The simplified expression provided applies to water or technically similar fluids.

FLUIDS *Water and EPDM & PTFE- compatible fluids • Other fluids on request*

TEMPERATURES

	Normal valve	*Valves with spacer* (for fluids compatible with mentioned temperatures)
• Minimum	*-10°C*	*-20 °C*
• Maximum	*+110 °C*	*+110 °C*

BRASS VALVE BODIES
ISO 5211 connection

Kv_S [m³/h] (with Δp = 100kPa = 1bar)

MODEL	Ø	Kv_S	DN	PN
2-Way ISO 5211	1/4"	5,4	--	40
	3/8"	6	10	40
	1/2"	16,3	15	40
	3/4"	29,5	20	40
	1"	43	25	40
	1"1/4 *	89	32	40
3-Way Diverter/Mixer ISO 5211	1/2"	6	15	25
	3/4"	11,5	20	16
	1" **	18,3	25	16
3-Way ISO 5211	1/2"	3,9	15	30
	3/4" ***	7,9	20	30

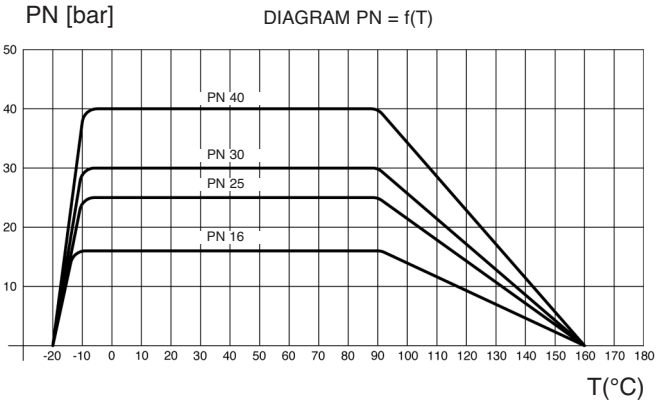

* *maximum differential pressure 25 bar*

** *maximum differential pressure 10 bar*

*** *maximum differential pressure 16 bar*

FLUIDS *Water and EPDM & PTFE- compatible fluids • Other fluids on request*

TEMPERATURES

	Normal valve	*Valves with spacer* (for fluids compatible with mentioned temperatures)
• Minimum	*-10°C*	*-20 °C*
• Maximum	*+110 °C*	*see "Thermal solar systems"*

Diamant PRO

MOTORIZED VALVES

FLUID-DYNAMIC FEATURES

VALVE BODIES **AISI 316** ISO 5211 connection

Kv_S [m³/h] (with Δp = 100kPa = 1bar)

MODEL	Ø	Kv_S	DN	PN
2-Way AISI 316	1/2"	16,3	15	64
	3/4"	29,5	20	64
	1" *	43	25	64
3-Way AISI 316	1/4"	2,8	--	64
	3/8"	3	10	64
	1/2" *	3,6	15	64

* *maximum differential pressure 25 bar*

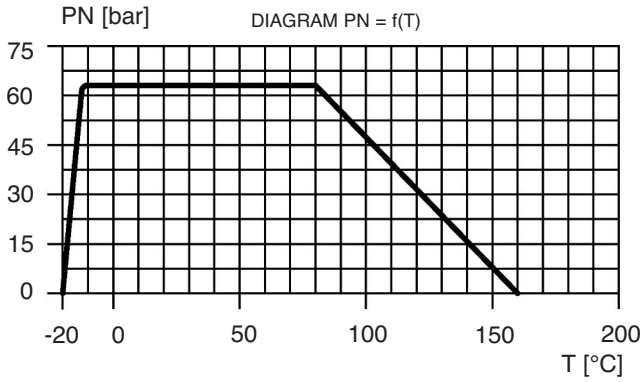

When the value of the flow is known, the general expression for the calculation of pressure losses is the following:

$$\Delta p\,[\text{bar}] = \left[\frac{Q\,[\text{m}^3/\text{h}]}{k_{v_s}}\right]^2$$

The simplified expression provided applies to water or technically similar fluids.i.

FLUIDS *Water and EPDM & PTFE- compatible fluids • Other fluids on request*

TEMPERATURES

	Normal valve	*Valves with spacer* (for fluids compatible with mentioned temperatures)
• Minimum	*-10°C*	*-20 °C*
• Maximum	*+110 °C*	*+160 °C*

Kv_S [m³/h] (with Δp = 100kPa = 1bar)

MODEL	Ø	Kv_S	DN	PN
2-Way PVC	3/8"	4,8	10	16
	1/2"	12	15	16
	3/4"	23	20	16
	1"	46	25	16
	1"1/4	66	32	16
	1"1/2 *	105	40	16
3-Way PVC **	3/8"	1,5 ÷ 4,7	10	16
	1/2"	2,1 ÷ 11,7	15	16
	3/4"	5,7 ÷ 22,8	20	16
	1"	8,4 ÷ 45,6	25	16
	1"1/4	16,2 ÷ 63	32	16
	1"1/2 *	67	40	16

* *maximum differential pressure 10 bar*

** *may vary according to the type of ball and its position*

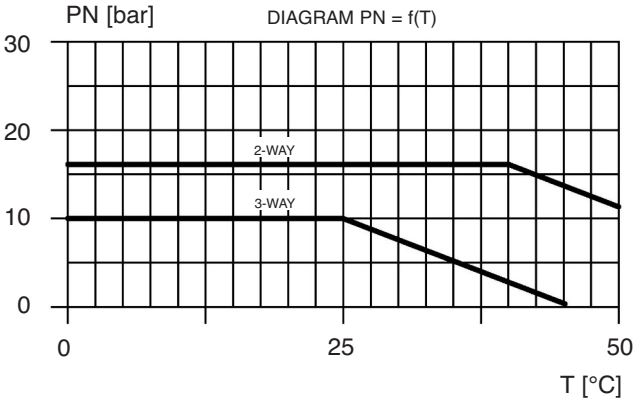

VALVE BODIES **PVC**

FLUIDS *Water and EPDM & PTFE- compatible fluids • Other fluids on request*

TEMPERATURES

	2-WAY	3-WAY
• Minimum	*0°C*	*0°C*
*• Maximum **	*+60°C*	*+60 °C*

* *at nominal operating pressure*

Diamant PRO

MOTORIZED VALVES

IMPIANTI SOLARI TERMICI

Thanks to the new techno-polymer they are made of, **Diamant PRO** case and valve bodies fitted with special seals for high temperatures can be used in **THERMAL SOLAR SYSTEMS,** with a suitable spacer.
This configuration allows the water to flow at high temperatures (max. 160°C) *.

In the specific instance, the maximum allowed temperatures are the following:

- 2 way valve body with ISO 5211 connection and spacer: T max = 160°C **a**
- 3 way valve body with ISO 5211 connection and spacer: T max = 160°C **b**
- diverter/mixer valve body with ISO 5211 connection and spacer: T max = 120°C **c**

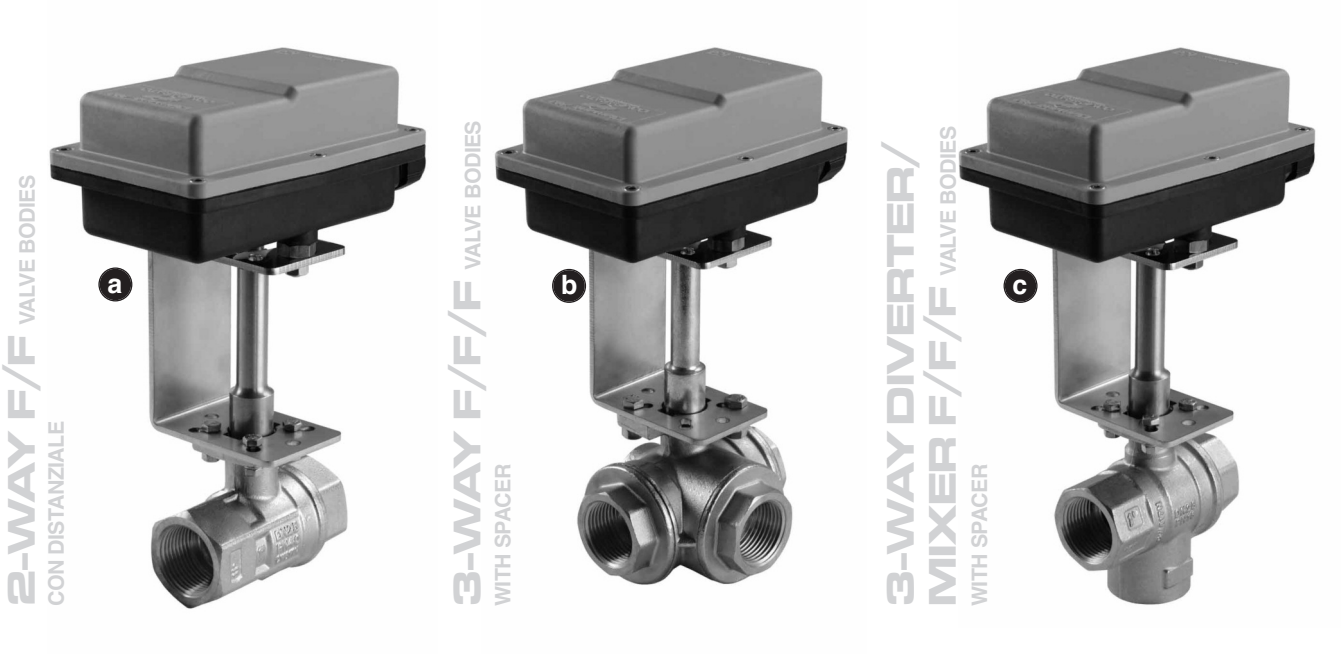

* please contact our Technical Department for specific system information.

GLOSSARY

- Operating torque: Torque which can be occasionally provided by the actuator, with no risk of breaks nor permanent deformation of the actuator components.
- Kv_S: Flow coefficient when the valve is completely open (2-way valve) or when the flow is completely deviated on a perpendicular (3-way valve).
- PN: Nominal operating pressure.
- Δp max: Maximum differential operating pressure.

UPDATED DATA SHEETS AVAILABLE AT www.comparato.com

HYDROTHERMAL SYSTEMS
COMPARATO NELLO SRL
17014 CAIRO MONTENOTTE (SV) ITALIA VIALE DELLA LIBERTÀ • LOCALITÀ FERRANIA • Tel. +39 019 510.371 - FAX +39 019 517.102
www.comparato.com e-mail:info@comparato.com