R2AA04010FXR1CM (R2AA04010FCR1CM6)

SANYO DENKI
SANMOTION

Dimensions (Unit:mm)

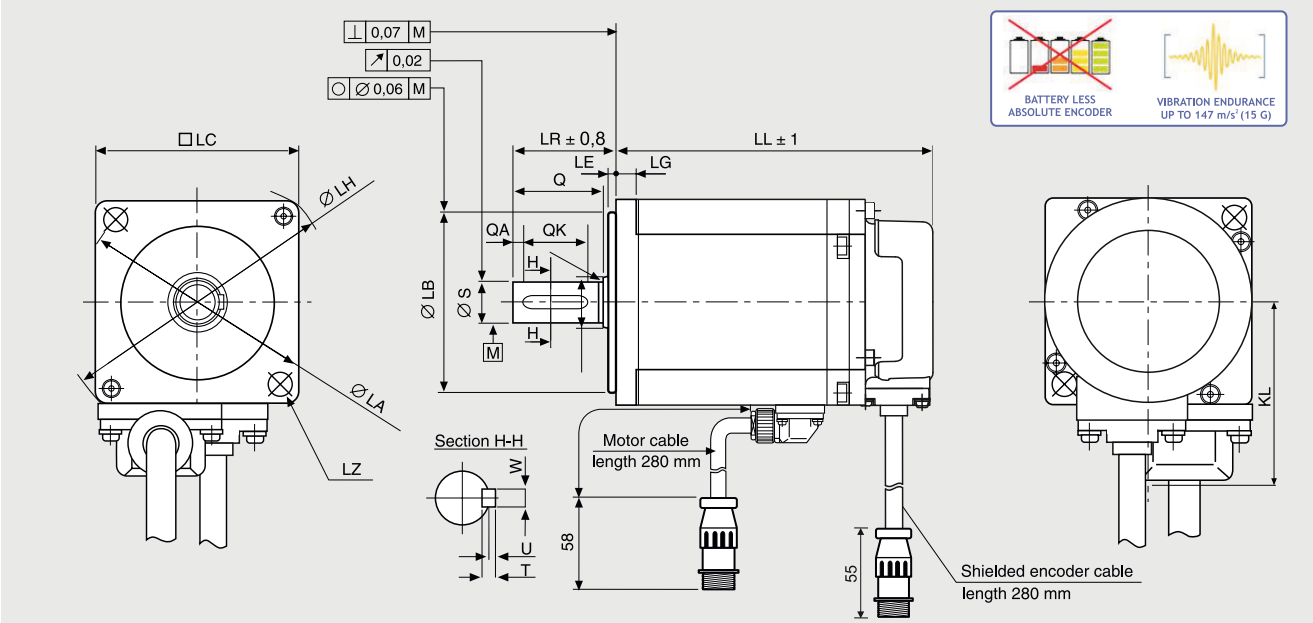

without brake LL	with brake LL	LG	KL	LA	LB	LE	LH	LC	LZ	LR	S	Q	QA	QK	W	T	U	QE	LT
83	119	5	34.5	46	0 30-0.021	2.5	56	40	2-Ø4.5	25	0 8-0.009	20	2	12	3	3	1.2	--	--

FEATURES

MODEL	R2AA04010FXR1CM
NOMINAL POWER [version with brake] (W)	100 [90]
NOMINAL SPEED (rpm)	3000
MAXIMUM SPEED (rpm)	6000
NOMINAL TORQUE (Nm)	0.286
STALL TORQUE (Nm)	0.318
MAXIMUM TORQUE (Nm)	1.18
INERTIA (Kg*m²)	0.0627×10^{-4}
BATTERY LESS ABSOLUTE ENCODER	SINGLE TURN: 131072 imp/rev (17 bit) MULTI TURN: 65536 turns
PROTECTION DEGREE	IP67*
WEIGHT [version with brake] (Kg)	0.53 [0.80]

* Protection degree IP67 (except for the shaft hole and the edge of the cable).

TORQUE CURVE
R2AA04010F [100W] + RS3A03

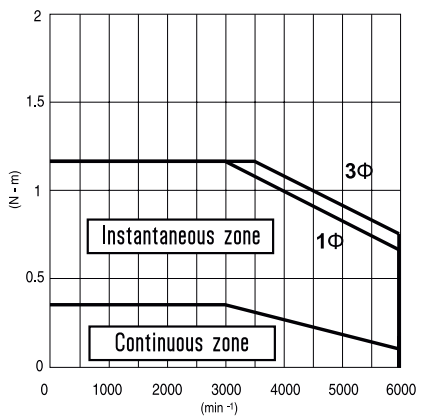

WITHOUT BRAKE
R2AA04010FXR1CM

Indicated performances refer to motor controlled by related new RS3 standard and EtherCat amplifiers.

1Φ torque curve with single phase power supply
3Φ = torque curve with three-phase power supply

Suggested amplifiers: RS3A03A0AL0W00P, RS3A03A2HA4W00P, RS3A03A0AL2

R.T.A. s.r.l.
Via E. Mattei - Fraz- Divisa
27020 Marcignago (PV) (Italy)
T +39.0382.929.855
F +39.0382.929.150
www.rta.it

R.T.A. Deutschland GmbH
Bublitzer Strasse 34, 40599
Duesseldorf (Germany)
T +49.211.749.668.60
F +49.211.749.668.66
www.rta-deutschland.de

R.T.A. IBERICA
C/Generalitat 22, Local 1
08850 Gava - Barcelona (Spain)
T +34 936.388.805
F +34 936.334.595
www.rta-iberica.es

R.T.A. INDIA Pvt
Teerth Business Center 3rd Floor, Unit No. 7,
Block EL-15, MIDC Bhosari Pimpi-Chinchwd,
Pune 411026 (India)
Tel. +91 9422507445
www.rta-india.in

R.T.A. s.r.l. PAVIA (ITALY) SANYO DENKI CO.,Ltd (JAPAN)